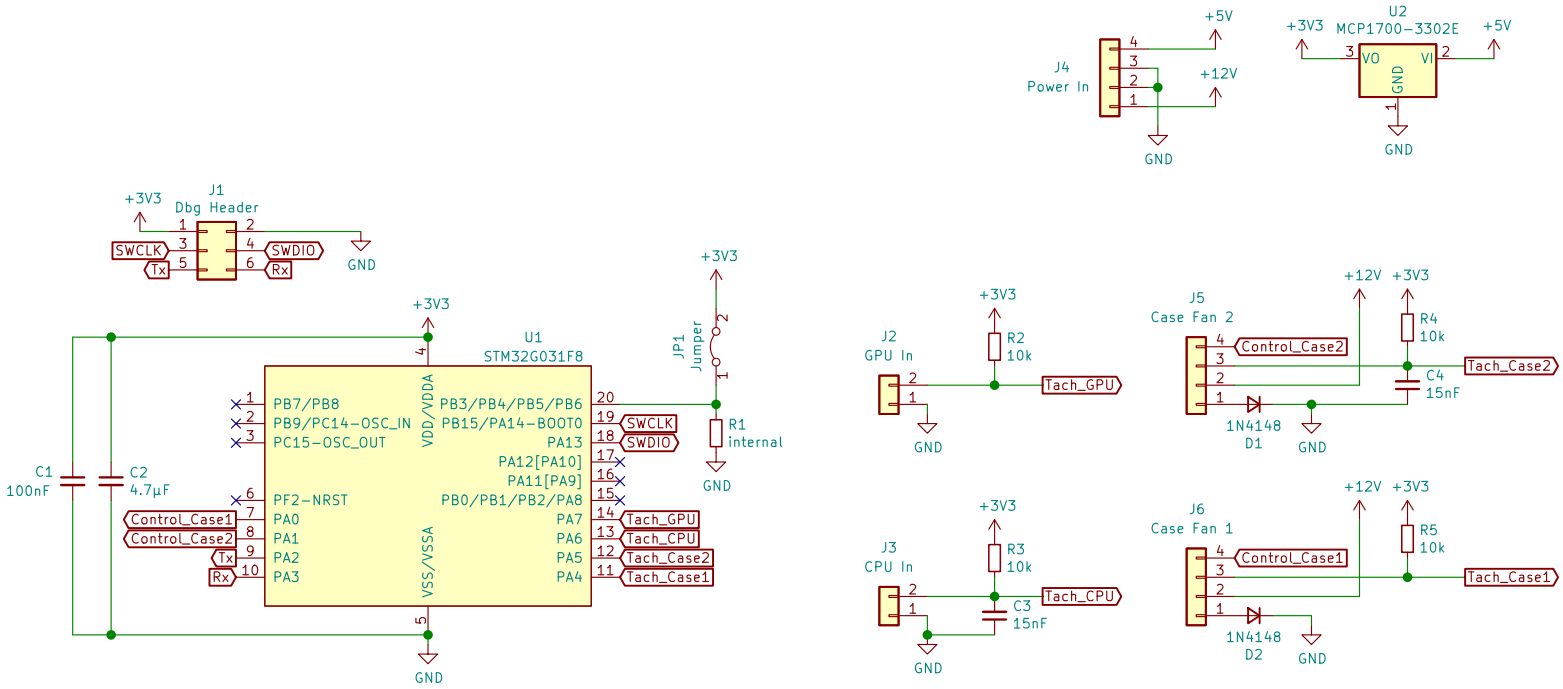

Sheet: /
File: fancontroller.sch

Title: A PC fan controller that doesn't (completely) suck

Size: A4	Date: 2021-04-25	Rev:
KiCad E.D.A. kicad 5.1.10		Id: 1/1